*baths*

# bliss bath screen

Elegant frameless two fold bath screen. Chromium plated hinges and Silver finish wall profile.

- *Domestic and hotel use*
- *5mm toughened safety glass*
- *Silver finish profile*
- *Handed options*
- *10 year guarantee*
- *Inward and outward opening*

**Illustrated**
**L9199AA** Bliss LH bath screen, two fold, chromium plated hinges and Silver finish wall profile

**Standards**
Conforms to BS EN14428:2004

**Weight**
Screen 31.5kg

**Options**
**L9198AA** Bliss RH bath screen, two fold, chromium plated hinges and Silver finish wall profile

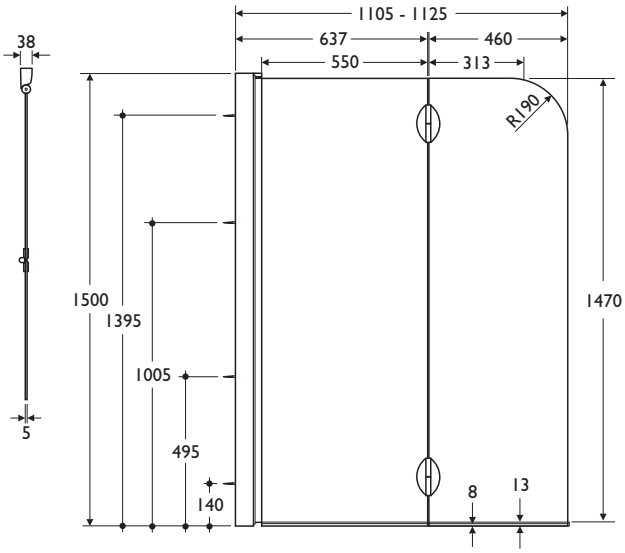


price 3