Series 2000

Magnehelic® Differential Pressure Gages

Indicate Positive, Negative or Differential, Accurate within 2%

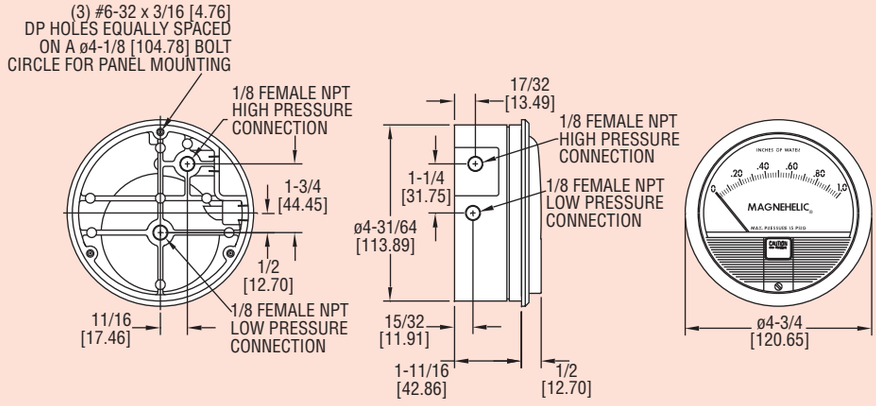

Dimensions, Standard Series 2000 Magnehelic® Pressure Gages.
(Slightly different on medium and high pressure models)

Select the Dwyer® Magnehelic® gage for high accuracy – guaranteed within 2% of full scale – and for the wide choice of 81 models available to suit your needs precisely. Using Dwyer's simple, frictionless Magnehelic® gage movement, it quickly indicates low air or non-corrosive gas pressures – either positive, negative (vacuum) or differential. The design resists shock, vibration and over-pressures. No manometer fluid to evaporate, freeze or cause toxic or leveling problems. It's inexpensive, too.
The Magnehelic® gage is the industry standard to measure fan and blower pressures, filter resistance, air velocity, furnace draft, pressure drop across orifice plates, liquid levels with bubbler systems and pressures in fluid amplifier or fluidic systems. It also checks gas-air ratio controls and automatic valves, and monitors blood and respiratory pressures in medical care equipment.

Note: May be used with Hydrogen. When ordering a Buna-N diaphragm pressures must be less than 35 psi.

Mounting

A single case size is used for most models of Magnehelic® gages. They can be flush or surface mounted with standard hardware supplied. With the optional **A-610** Pipe Mounting Kit they may be conveniently installed on horizontal or vertical 1-1/4″ - 2″ pipe. Although calibrated for vertical position, many ranges above 1″ may be used at any angle by simply re-zeroing. However, for maximum accuracy, they must be calibrated in the same position in which they are used. These characteristics make Magnehelic® gages ideal for both stationary and portable applications. A 4-9/16″ hole is required for flush panel mounting. Complete mounting and connection fittings plus instructions are furnished with each instrument.

Flush...Surface... or Pipe Mounted

Vent Valves

In applications where pressure is continuous and the Magnehelic® gage is connected by metal or plastic tubing which cannot be easily removed, we suggest using Dwyer A-310A vent valves to connect gage. Pressure can then be removed to check or re-zero the gage.

High and Medium Pressure Models

Installation is similar to standard gages except that a 4-13/16″ hole is needed for flush mounting. The medium pressure construction is rated for internal pressures up to 35 psig and the high pressure up to 80 psig. Available for all models. Because of larger case, the medium pressure and high pressure models will not fit in a portable case size. Installation of the A-321 safety relief valve on standard Magnehelic® gages often provides adequate protection against infrequent overpressure.

SPECIFICATIONS

Service: Air and non-combustible, compatible gases. (Natural Gas option available.)
Wetted Materials: Consult factory.
Housing: Die cast aluminum case and bezel, with acrylic cover. Exterior finish is coated gray to withstand 168 hour salt spray corrosion test.
Accuracy: ±2% of full scale (±3% on - 0, -100 Pa, -125 Pa, 10MM and ±4% on - 00, -60 Pa, -6MM ranges), throughout range at 70°F (21.1°C).
Pressure Limits: -20″ Hg. to 15 psig.† (-0.677 bar to 1.034 bar); MP option: 35 psig (2.41 bar), HP option: 80 psig (5.52 bar).
Overpressure: Relief plug opens at approximately 25 psig (1.72 bar), standard gages only.
Temperature Limits: 20 to 140°F.* (-6.67 to 60°C).
Size: 4″ (101.6 mm) Diameter dial face.
Mounting Orientation: Diaphragm in vertical position. Consult factory for other position orientations.
Process Connections: 1/8″ female NPT duplicate high and low pressure taps - one pair side and one pair back.
Weight: 1 lb 2 oz (510 g), MP & HP 2 lb 2 oz (963 g).
Standard Accessories: Two 1/8″ NPT plugs for duplicate pressure taps, two 1/8″ pipe thread to rubber tubing adapter and three flush mounting adapters with screws. (Mounting and snap ring retainer substituted for 3 adapters in MP & HP gage accessories.)

*Low temperature models available as special option.
†For applications with high cycle rate within gage total pressure rating, next higher rating is recommended. See Medium and High pressure options at lower left.

OPTIONS AND ACCESSORIES

Transparent Overlays
Furnished in red and green to highlight and emphasize critical pressures.

Adjustable Signal Flag
Integral with plastic gage cover. Available for most models except those with medium or high pressure construction. Can be ordered with gage or separate.

LED Setpoint Indicator
Bright red LED on right of scale shows when setpoint is reached. Field adjustable from gage face, unit operates on 12-24 VDC. Requires MP or HP style cover and bezel.

A-432 Portable Kit
Combine carrying case with any Magnehelic® gage of standard range, except high pressure connection. Includes 9 ft (2.7 m) of 3/16″ I.D. rubber tubing, standhang bracket and terminal tube with holder.

A-605 Air Filter Gage Accessory Kit
Adapts any standard Magnehelic® gage for use as an air filter gage. Includes aluminum surface mounting bracket with screws, two 5 ft (1.5 m) lengths of 1/4″ aluminum tubing two static pressure tips and two molded plastic vent valves, integral compression fittings on both tips and valves.

For latest prices and delivery to your door visit MyTub Ltd - 0845 303 8383 - www.mytub.co.uk - info@mytub.co.uk

Quality design and construction features

Bezel provides flange for flush mounting in panel.

Clear plastic face is highly resistant to breakage. Provides undistorted viewing of pointer and scale.

Precision litho-printed scale is accurate and easy to read.

Red tipped pointer of heat treated aluminum tubing is easy to see. It is rigidly mounted on the helix shaft.

Pointer stops of molded rubber prevent pointer over-travel without damage.

"Wishbone" assembly provides mounting for helix, helix bearings and pointer shaft.

Jeweled bearings are shock-resistant mounted; provide virtually friction-free motion for helix. Motion damped with high viscosity silicone fluid.

Zero adjustment screw is conveniently located in the plastic cover, and is accessible without removing cover. O-ring seal provides pressure tightness.

Helix is precision made from an alloy of high magnetic permeability. Mounted in jeweled bearings, it turns freely, following the magnetic field to move the pointer across the scale.

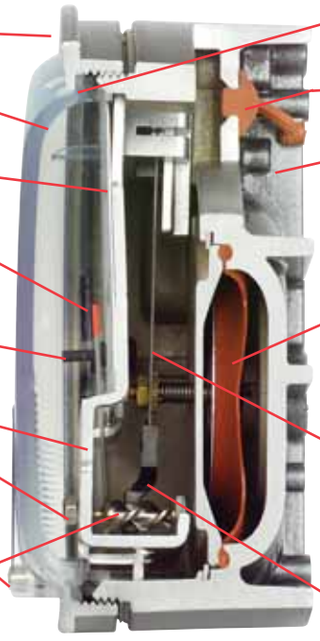

O-ring seal for cover assures pressure integrity of case.

Blowout plug of silicone rubber protects against overpressure on 15 psig rated models. Opens at approximately 25 psig.

Die cast aluminum case is precision made and iridite-dipped to withstand 168 hour salt spray corrosion test. Exterior finished in baked dark gray hammerloid. One case size is used for all standard pressure options, and for both surface and flush mounting.

Silicone rubber diaphragm with integrally molded O-ring is supported by front and rear plates. It is locked and sealed in position with a sealing plate and retaining ring. Diaphragm motion is restricted to prevent damage due to overpressures.

Calibrated range spring is flat spring steel. Small amplitude of motion assures consistency and long life. It reacts to pressure on diaphragm. Live length adjustable for calibration.

Samarium Cobalt magnet mounted at one end of range spring rotates helix without mechanical linkages.

Series 2000 Magnehelic® Gage — Models and Ranges
Page V shows examples of special models built for OEM customers. For special scales furnished in ounces per square inch, inches of mercury, metric units, square root scales for volumetric flow, etc., contact the factory.

Model	Range Inches of Water
2000-00N†••	.05-0-.2
2000-00†••	0-.25
2000-0†•	0-.50
2001	0-1.0
2002	0-2.0
2003	0-3.0
2004	0-4.0
2005	0-5.0
2006	0-6.0
2008	0-8.0
2010	0-10
2012	0-12
2015	0-15
2020	0-20
2025	0-25
2030	0-30
2040	0-40
2050	0-50
2060	0-60
2080	0-80
2100	0-100
2120	0-120
2150	0-150
2160	0-160
2180	0-180
2250	0-250
Zero Center Ranges	
2300-00†••	0.125-0-0.125
2300-0†•	.25-0-.25
2301	.5-0-.5
2302	1-0-1
2304	2-0-2
2310	5-0-5
2320	10-0-10
2330	15-0-15

Model	Range PSI
2201	0-1
2202	0-2
2203	0-3
2204	0-4
2205	0-5
2210*	0-10
2215*	0-15
2220*	0-20
2230**	0-30

Model	Range, CM of Water
2000-15CM	0-15
2000-20CM	0-20
2000-25CM	0-25
2000-50CM	0-50
2000-80CM	0-80
2000-100CM	0-100
2000-150CM	0-150
2000-200CM	0-200
2000-250CM	0-250
2000-300CM	0-300
Zero Center Ranges	
2300-4CM	2-0-2
2300-10CM	5-0-5
2300-30CM	15-0-15

†These ranges calibrated for vertical scale position.
• Accuracy +/-3%
• • Accuracy +/-4%
*MP option standard
**HP option standard

Model	Range MM of Water
2000-6MM†••	0-6
2000-10MM†•	0-10
2000-15MM	0-15
2000-25MM	0-25
2000-30MM	0-30
2000-50MM	0-50
2000-80MM	0-80
2000-100MM	0-100
2000-125MM	0-125
2000-150MM	0-150
2000-200MM	0-200
2000-250MM	0-250
2000-300MM	0-300
Zero Center Ranges	
2300-6MM†••	3-0-3
2300-10MM†•	5-0-5
2300-20MM†•	10-0-10

Model	Range, Pa
2000-60NPA†••	10-0-50
2000-60PA†••	0-60
2000-100PA†•	0-100
2000-125PA†•	0-125
2000-250PA	0-250
2000-300PA	0-300
2000-500PA	0-500
2000-750PA	0-750
2000-1000PA	0-100 x 10
Zero Center Ranges	
Model	Range, Pa
2300-60PA†••	30-0-30
2300-100PA†•	50-0-50
2300-120PA	60-0-60
2300-200PA	100-0-100
2300-250PA	125-0-125
2300-300PA	150-0-150
2300-500PA	250-0-250
2300-1000PA	500-0-500

Model	Range, kPa
2000-0.5KPA	0-0.5
2000-1KPA	0-1
2000-1.5KPA	0-1.5
2000-2KPA	0-2
2000-2.5KPA	0-2.5
2000-3KPA	0-3
2000-4KPA	0-4
2000-5KPA	0-5
2000-8KPA	0-8
2000-10KPA	0-10
2000-15KPA	0-15
2000-20KPA	0-20
2000-25KPA	0-25
2000-30KPA	0-30
Zero Center Ranges	
2300-1KPA	.5-0-.5
2300-2KPA	1-0-1
2300-2.5KPA	1.25-0-1.25
2300-3KPA	1.5-0-1.5

Dual Scale Air Velocity Units
For use with pitot tube

Model	Range in W.C./ Velocity F.P.M.
2000-00AV†••	0-.25/300-2000
2000-0AV†•	0-.50/500-2800
2001AV	0-1.0/500-4000
2002AV	0-2.0/1000-5600
2005AV	0-5.0/2000-8800
2010AV	0-10/2000-12500

Dual Scale English/Metric Models

Model	Range, In. W.C.	Range, Pa or kPa
2000-OOD†••	0-.25	0-62 Pa
2000-OD†•	0-0.5	0-125 Pa
2001D	0-1.0	0-250 Pa
2002D	0-2.0	0-500 Pa
2003D	0-3.0	0-750 Pa
2004D	0-4.0	0-1.0 kPa
2005D	0-5.0	0-1.25 kPa
2006D	0-6.0	0-1.5 kPa
2008D	0-8.0	0-2.0 kPa
2010D	0-10	0-2.5 kPa
2015D	0-15	0-3.7 kPa
2020D	0-20	0-5 kPa
2025D	0-25	0-6.2 kPa
2050D	0-50	0-12.4 kPa
2060D	0-60	0-15 kPa

ACCESSORIES
A-299, Surface Mounting Bracket
A-300, Flat Flush Mounting Bracket
A-310A, 3-Way Vent Valve
A-321, Safety Relief Valve
A-432, Portable Kit
A-448, 3-piece magnet kit for mounting Magnehelic® gage directly to magnetic surface
A-605, Air Filter Kit
A-610, Pipe Mount Kit

OPTIONS — To order, add suffix: I.E. 2001-ASF
ASF, Adjustable Signal Flag
HP, High Pressure Option
LT, Low Temperatures to -20°F
MP, Med. Pressure Option
SP, Setpoint Indicator
Scale Overlays, Red, Green, Mirrored or Combination, Specify Locations

For latest prices and delivery to your door visit MyTub Ltd - 0845 303 8383 - www.mytub.co.uk - info@mytub.co.uk